Counters

Digital System Fundamentals

Sorayut Glomglome

Learning Outcome

- Discuss the types of state machines
- Describe the difference between an asynchronous and a synchronous counter
- Analyze counter timing diagrams & counter circuits
- Determine the modulus of a counter
- Modify the modulus of a counter
- Use an up/down counter to generate forward and reverse binary sequences
- Use logic gates to decode any given state of a counter

CONTENTS

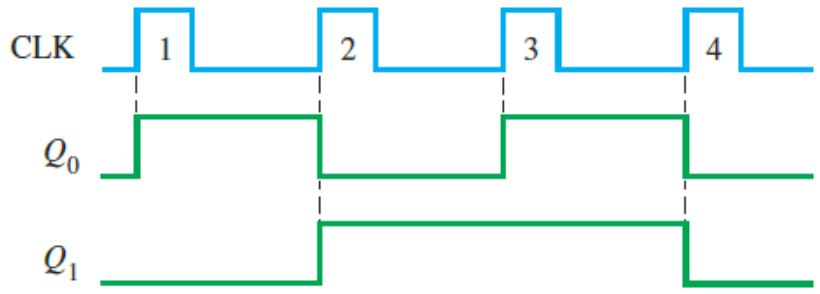

1. Finite State Machines
2. Asynchronous Counters
3. Synchronous Counters
4. Up/Down Synchronous Counters
5. Design of Synchronous Counters
6. Counter Decoding
7. Counter Applications

1. Finite State Machines

A State Machine

- A *state machine* is a sequential circuit having a limited (finite) number of states occurring in a prescribed order.
- A counter is an example of a state machine; the number of states is called the modulus.
- Two basic types of state machines are the Moore and the Mealy.
- Both types have a timing input (clock) that is not considered a controlling input.

Moore State Machine

- The outputs depend only on the internal present state.
- Consists of combinational logic that determines the sequence and memory (flip-flops).
- The combinational logic is a gate array with outputs that determine the next state of the flip-flops in the memory.

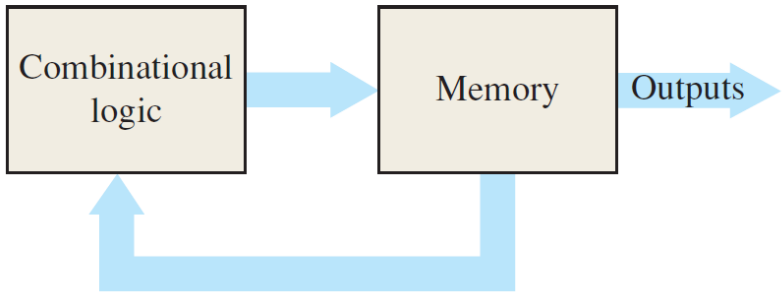

Moore Machine : Example

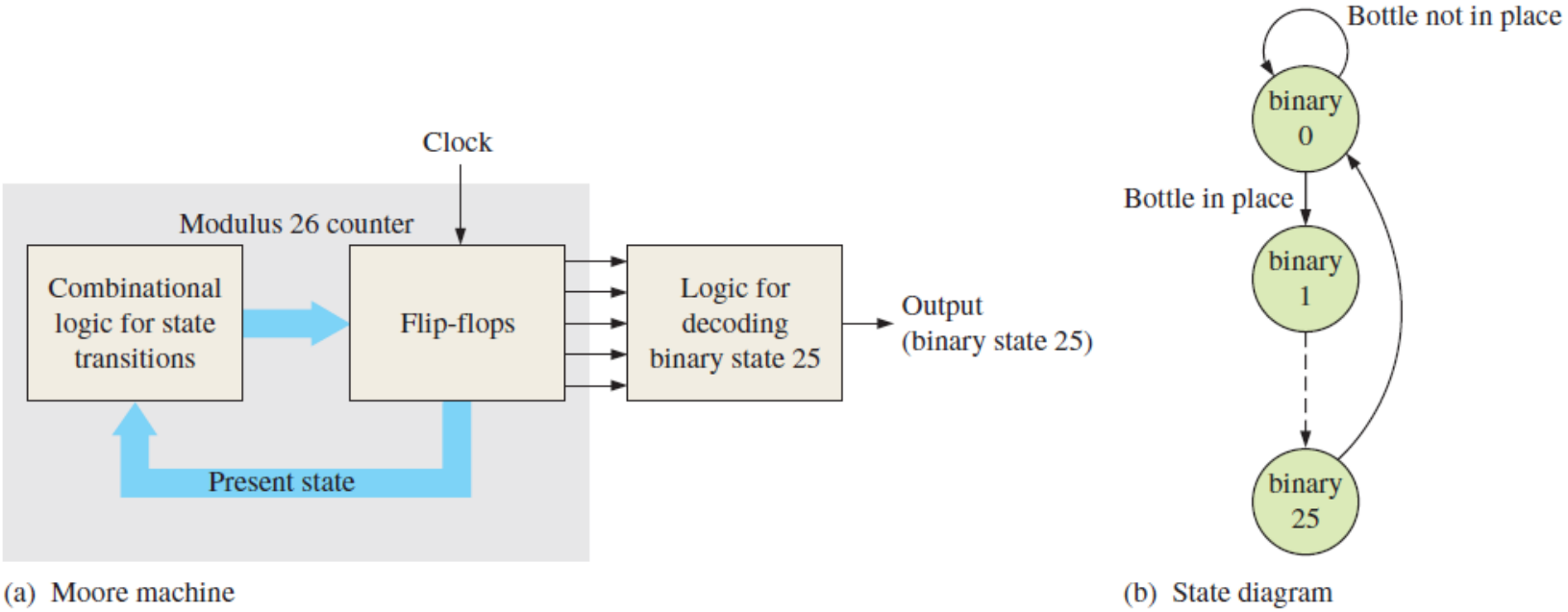

FIGURE 9–2 A fixed-modulus binary counter as an example of a Moore state machine. The dashed line in the state diagram means the states between binary 1 and 25 are not shown for simplicity.

Mealy State Machine

- The outputs depend on both the internal present state and on the inputs.
- The present state affects the outputs, just as in the Moore machine; but in addition, the inputs also affect the outputs.
- The outputs come directly from the combinational logic and not the memory.

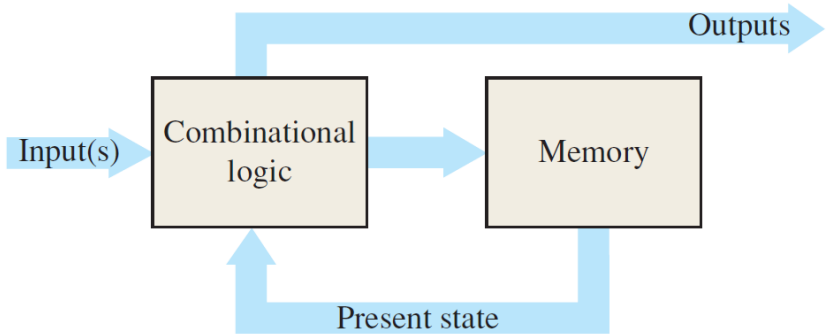

Mealy Machine : Example

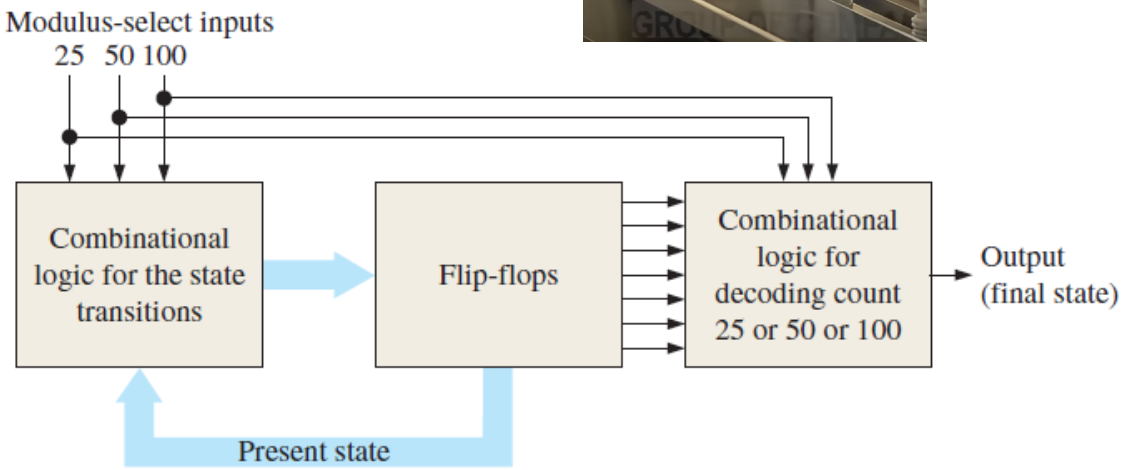

(a) Mealy machine

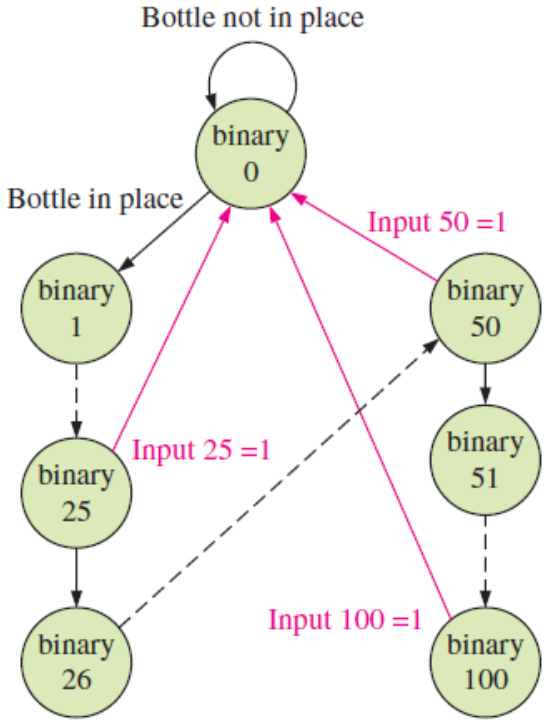

(b) State diagram

FIGURE 9–3 A variable-modulus binary counter as an example of a Mealy state machine. The red arrows in the state diagram represent the recycle paths that depend on the input number. The black dashed lines mean the interim states are not shown for simplicity.

2. Asynchronous Counters

Asynchronous Counters

- The term *asynchronous* refers to events that do not have a fixed time relationship with each other and, generally, do not occur at the same time
- An *asynchronous counter* is one in which the flip-flops (FF) within the counter do not change states at exactly the same time because they do not have a common clock pulse.

A 2-Bit Asynchronous Binary Counter

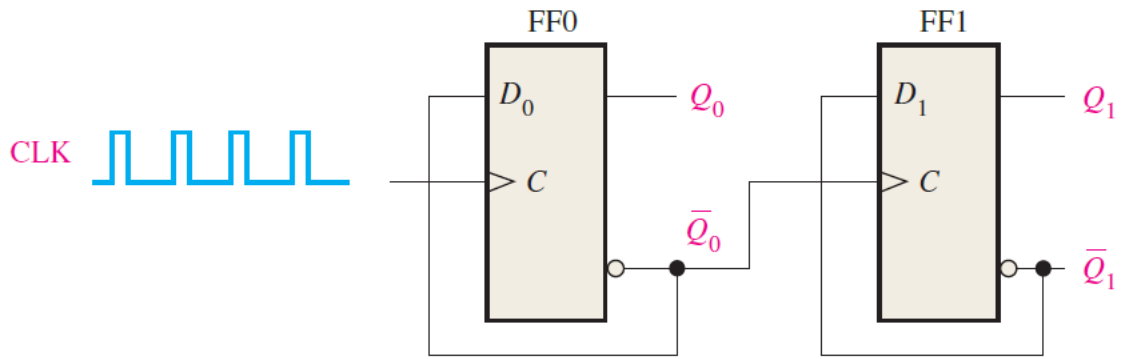

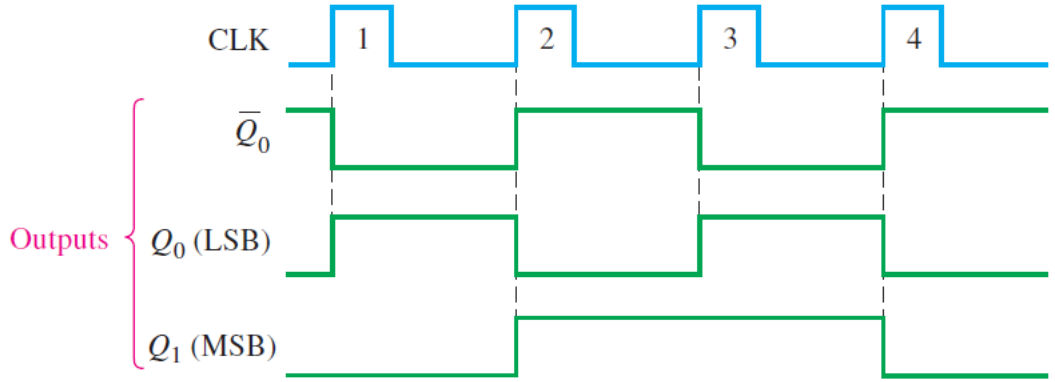

TABLE 9–1

Binary state sequence for the counter in Figure 9–4.

Clock Pulse	Q_1	Q_0
Initially	0	0
1	0	1
2	1	0
3	1	1
4 (recycles)	0	0

A 3-Bit Asynchronous Binary Counter

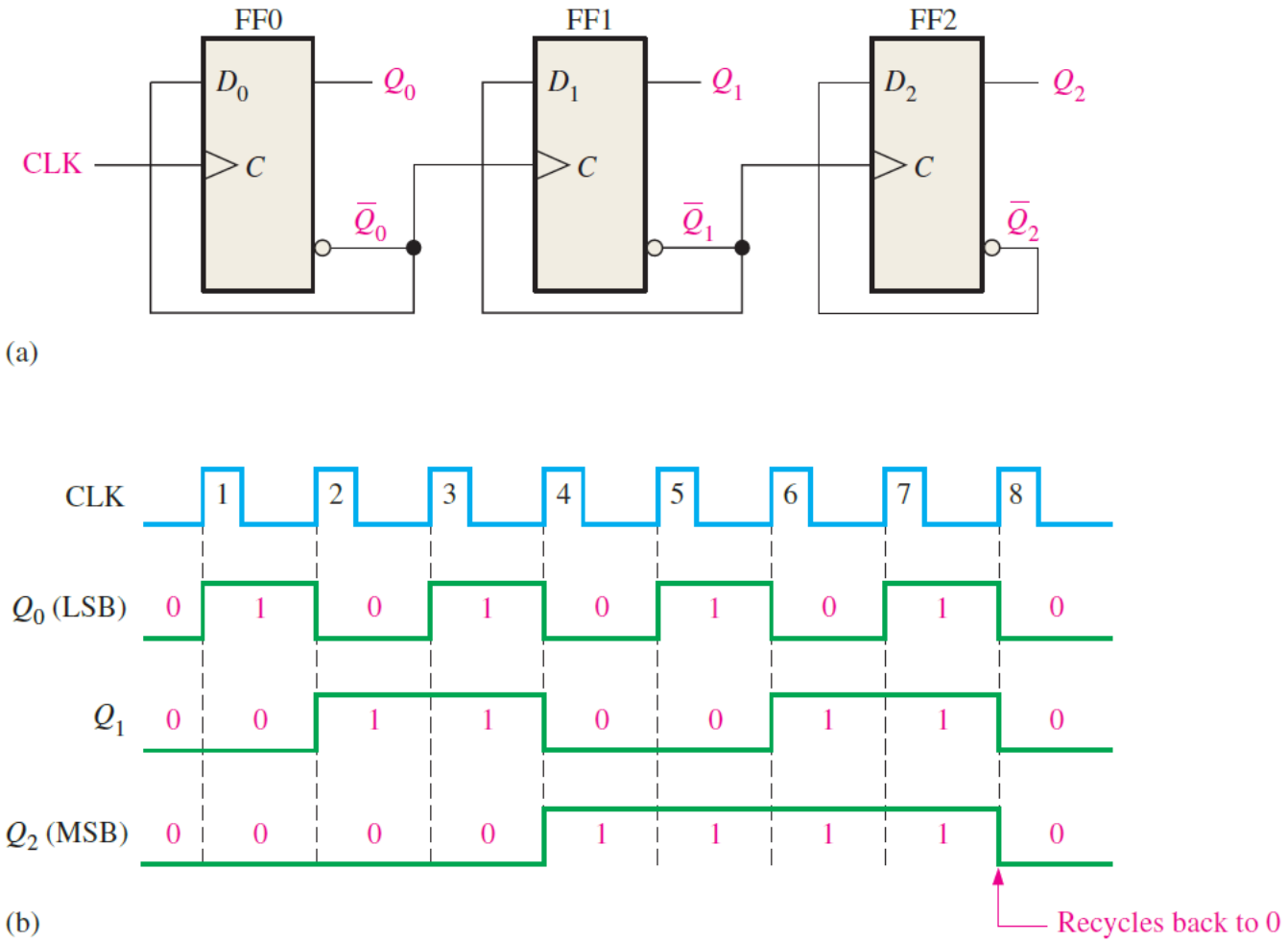

Ripple Counters

- Asynchronous counters are commonly referred to as ripple counters because of propagation delay.

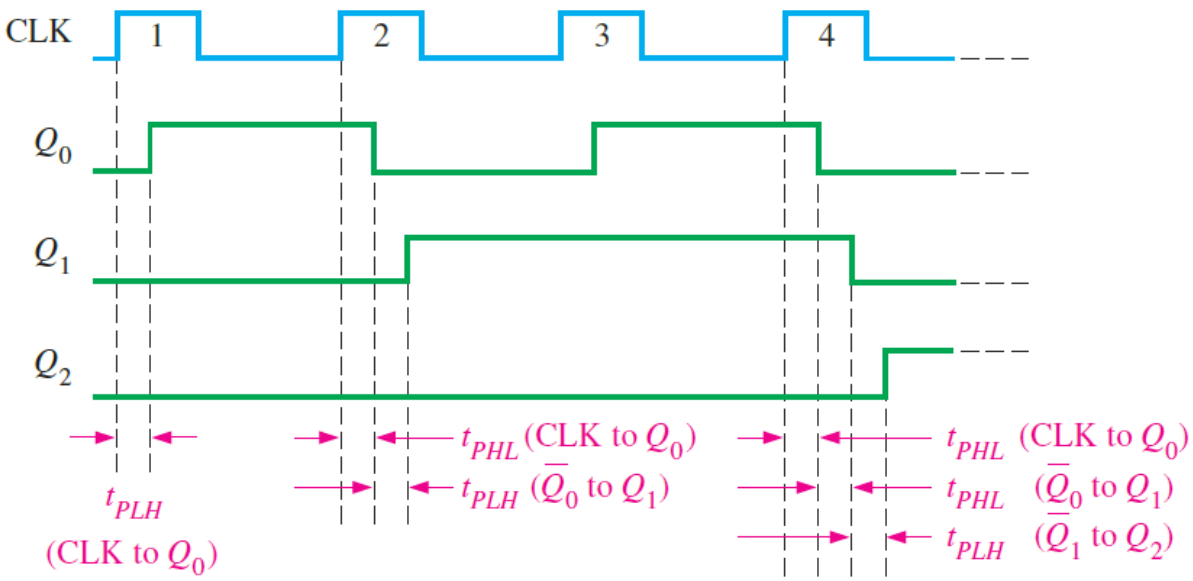

FIGURE 9–7 Propagation delays in a 3-bit asynchronous (ripple-clocked) binary counter.

A 4-Bit Asynchronous Binary Counter

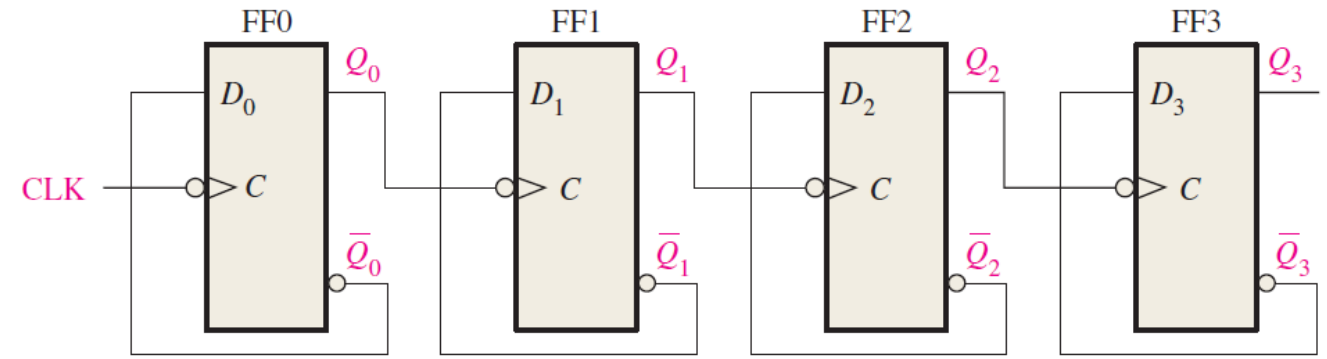

(a)

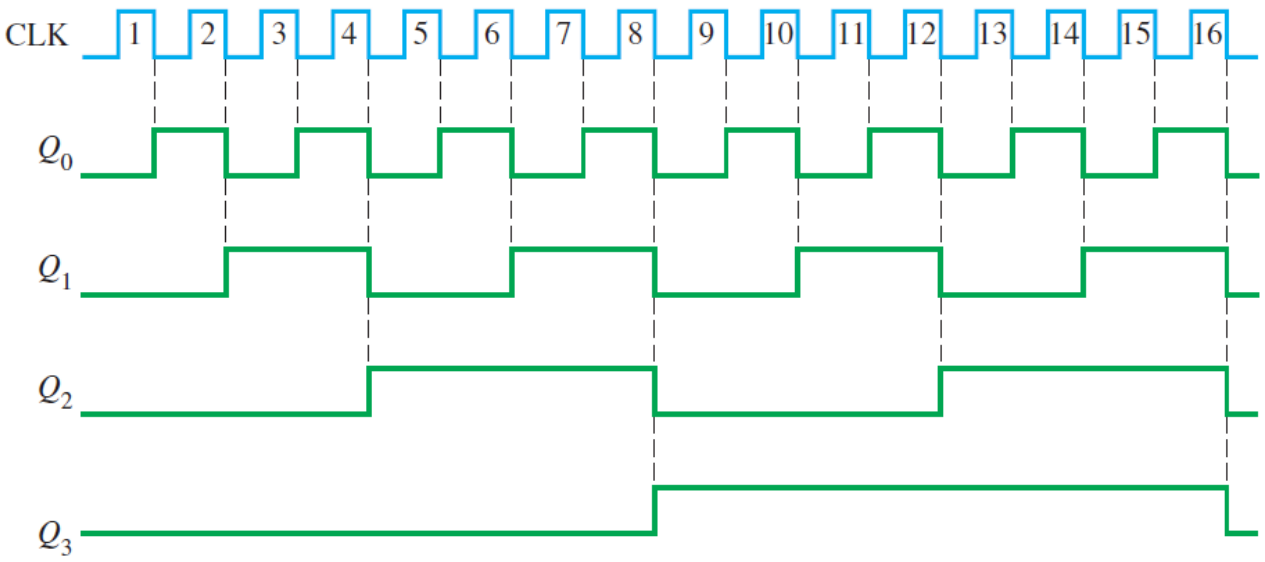

(b)

Asynchronous Decade Counters

- The *modulus* of a counter is the number of unique states through which the counter will sequence.
- The maximum possible number of states (maximum modulus) of a counter is 2^n, where n is the number of flip-flops in the counter.
- A decade counter with a count sequence of zero (0000) through nine (1001) is a BCD decade counter.

Decade Counter : Partial Decoding

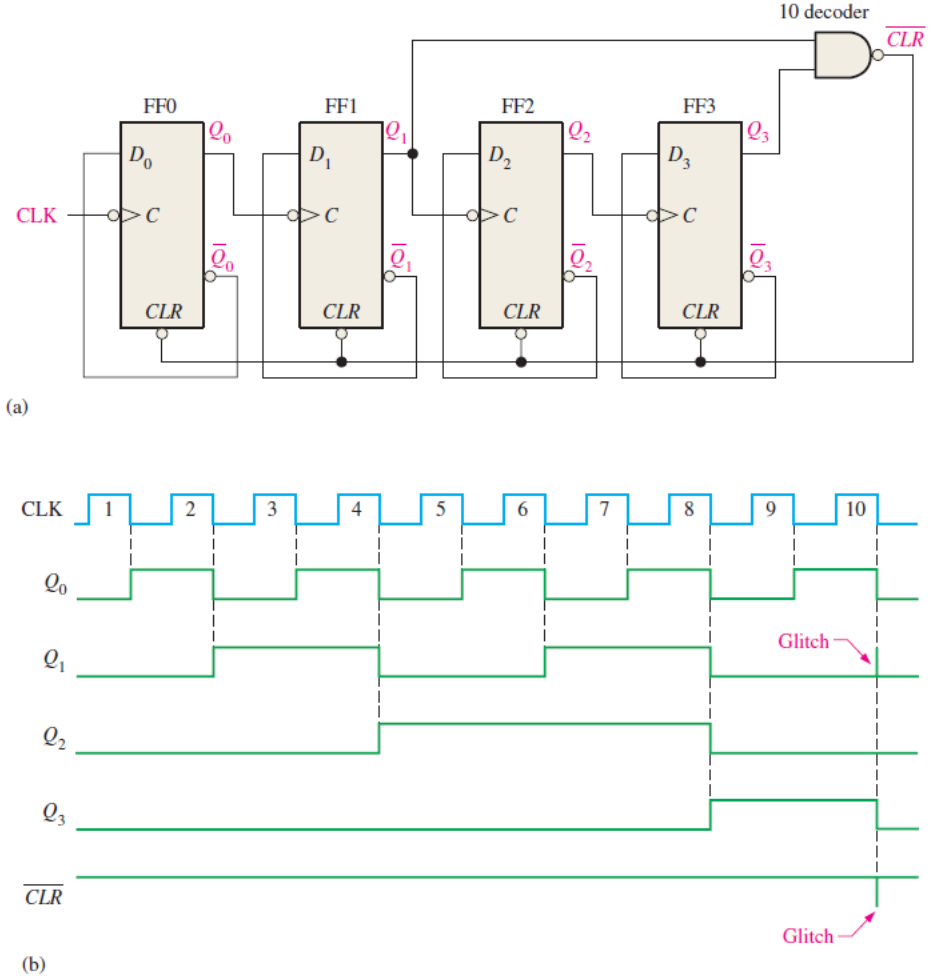

FIGURE 9–9 An asynchronously clocked decade counter with asynchronous recycling.

Example

- Show how an asynchronous counter with J-K flip-flops can be implemented having a modulus of twelve with a straight binary sequence from 0000 through 1011.

Q_3	Q_2	Q_1	Q_0	
0	0	0	0	
.	.	.	.	
.	.	.	.	Recycles
.	.	.	.	
1	0	1	1	
1	1	0	0	Normal next state

Example

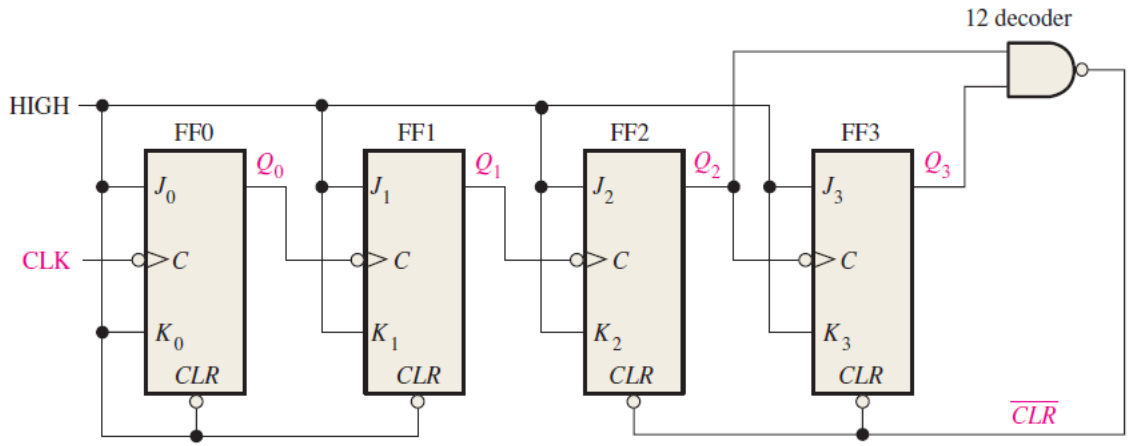
12 decoder
HIGH
FF0
FF1
FF2
FF3
Q_0
Q_1
Q_2
Q_3
J_0
J_1
J_2
J_3
CLK
C
K_0
K_1
K_2
K_3
CLR
$\overline{CLR}$

(a)

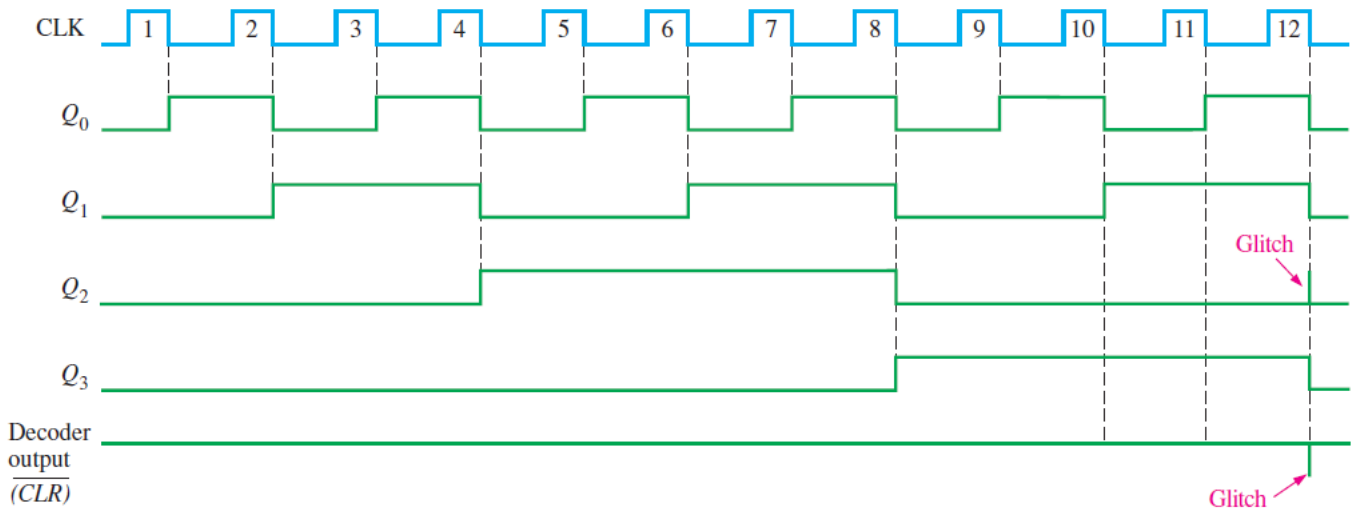
CLK
1
2
3
4
5
6
7
8
9
10
11
12
Q_0
Q_1
Q_2
Q_3
Glitch
Decoder output
$(\overline{CLR})$
Glitch

(b)

3. Synchronous Counters

Synchronous Counters

- The term *synchronous* refers to events that have a fixed time relationship with each other.
- A *synchronous counter* is one in which all the flip-flops in the counter are clocked at the same time by a common clock pulse.

A 2-Bit Synchronous Binary Counter

Inputs			Outputs		
J	K	CLK	Q	$\overline{Q}$	Comments
0	0	↑	Q_0	$\overline{Q}_0$	No change
0	1	↑	0	1	RESET
1	0	↑	1	0	SET
1	1	↑	$\overline{Q}_0$	Q_0	Toggle

The clock input goes to each flip-flop in a synchronous counter.

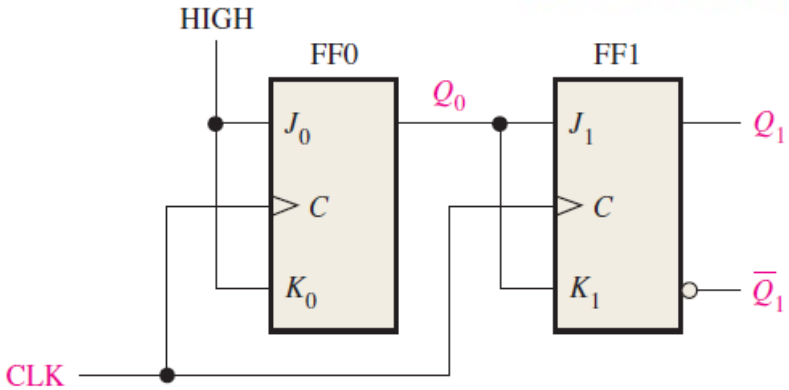

(a) J-K flip-flop

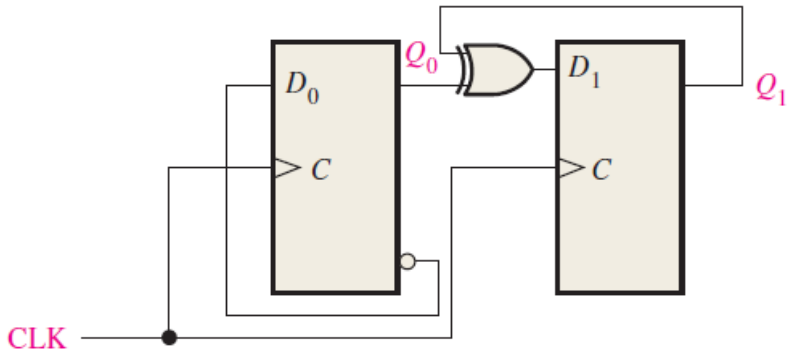

(b) D flip-flop

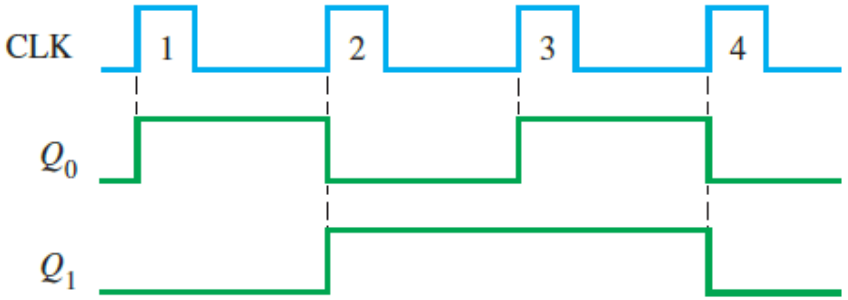

Propagation Delay

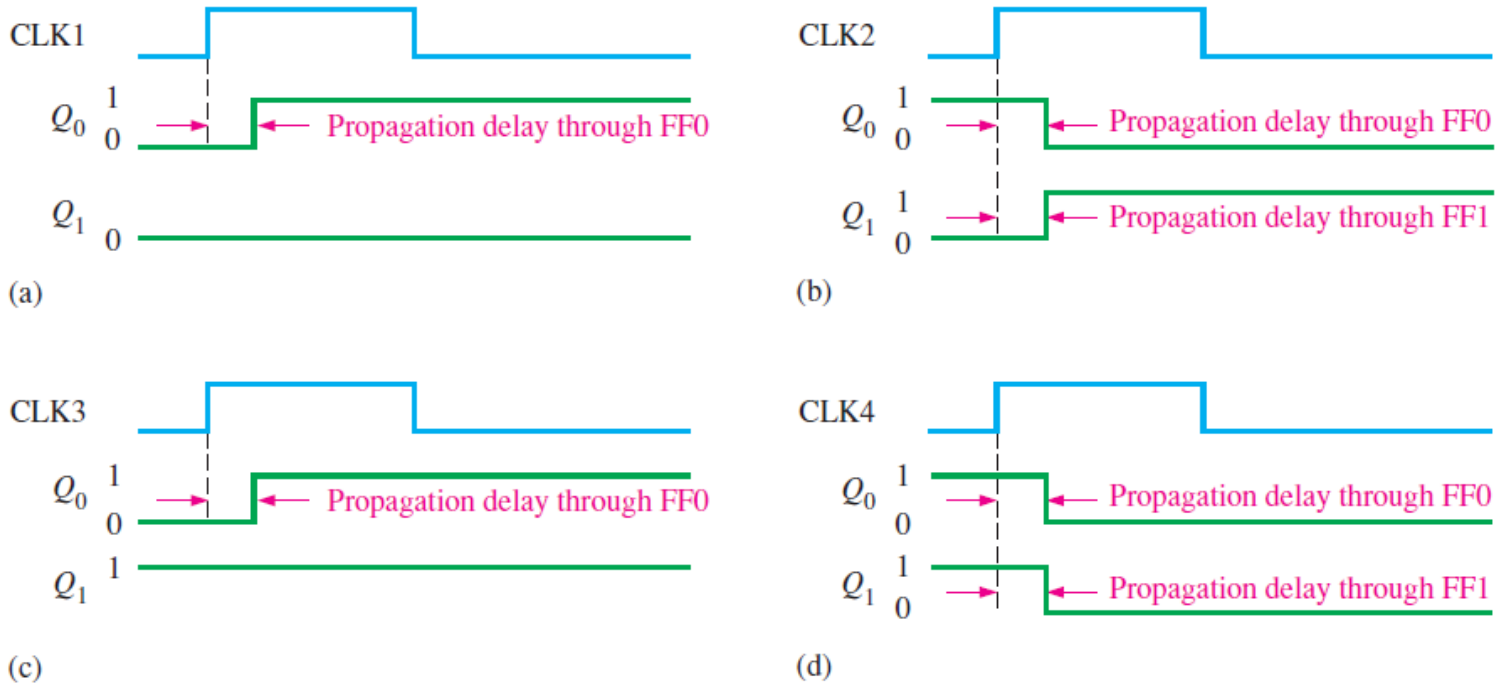

FIGURE 9–13 Timing details for the 2-bit synchronous counter operation (the propagation delays of both flip-flops are assumed to be equal).

A 3-Bit Synchronous Binary Counter

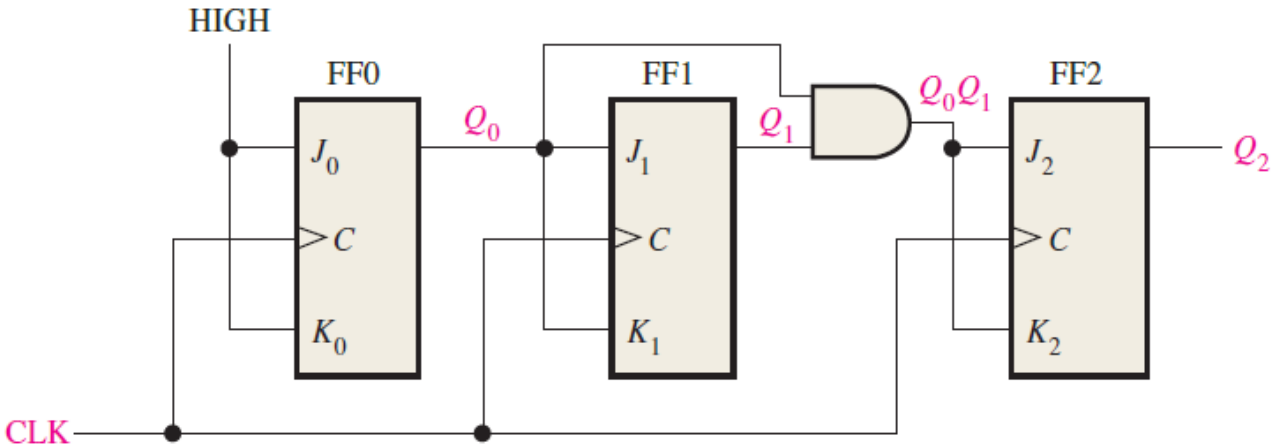

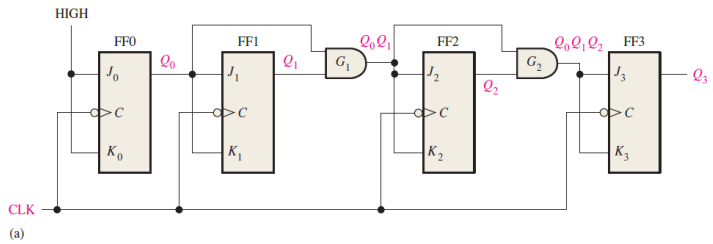

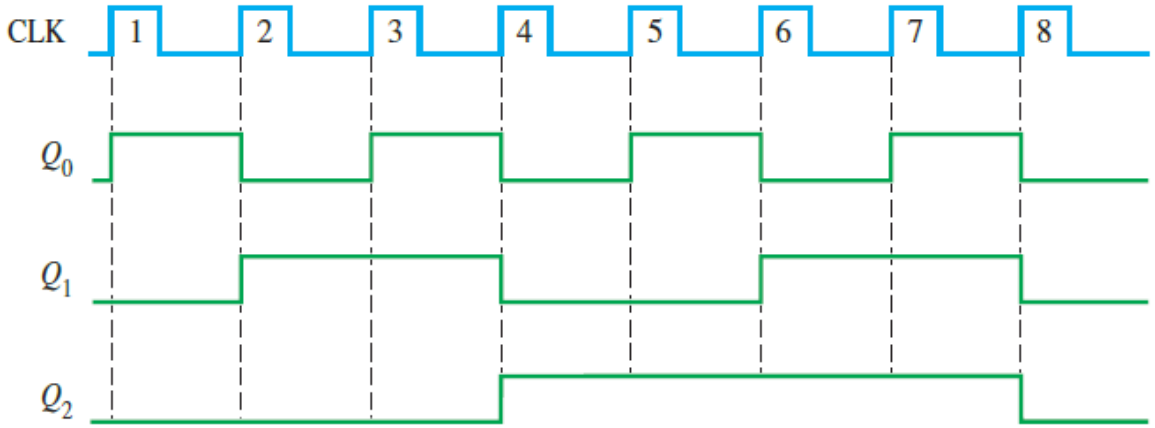

TABLE 9–3

State sequence for a 3-bit binary counter.

Clock Pulse	Q_2	Q_1	Q_0
Initially	0	0	0
1	0	0	1
2	0	1	0
3	0	1	1
4	1	0	0
5	1	0	1
6	1	1	0
7	1	1	1
8 (recycles)	0	0	0

The Analysis of the 3-Bit Counter

TABLE 9–4

Summary of the analysis of the counter in Figure 9–15.

Clock Pulse	Outputs Q_2	Q_1	Q_0	J-K Inputs J_2	K_2	J_1	K_1	J_0	K_0	At the Next Clock Pulse FF2	FF1	FF0
Initially	0	0	0	0	0	0	0	1	1	NC*	NC	Toggle
1	0	0	1	0	0	1	1	1	1	NC	Toggle	Toggle
2	0	1	0	0	0	0	0	1	1	NC	NC	Toggle
3	0	1	1	1	1	1	1	1	1	Toggle	Toggle	Toggle
4	1	0	0	0	0	0	0	1	1	NC	NC	Toggle
5	1	0	1	0	0	1	1	1	1	NC	Toggle	Toggle
6	1	1	0	0	0	0	0	1	1	NC	NC	Toggle
7	1	1	1	1	1	1	1	1	1	Toggle	Toggle	Toggle
										Counter recycles back to 000.		

*NC indicates *No Change*.

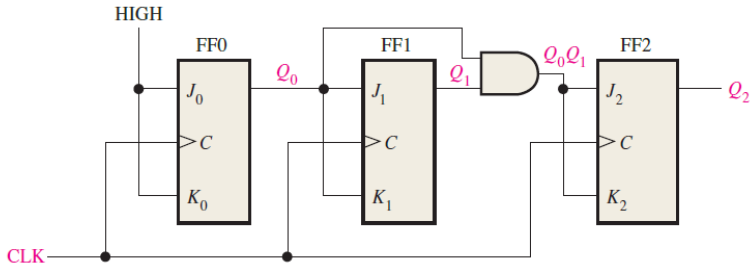

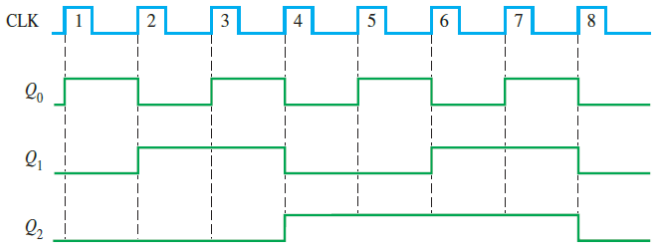

TABLE 9–3

State sequence for a 3-bit binary counter.

Clock Pulse	Q_2	Q_1	Q_0
Initially	0	0	0
1	0	0	1
2	0	1	0
3	0	1	1
4	1	0	0
5	1	0	1
6	1	1	0
7	1	1	1
8 (recycles)	0	0	0

A 4-Bit Synchronous Binary Counter

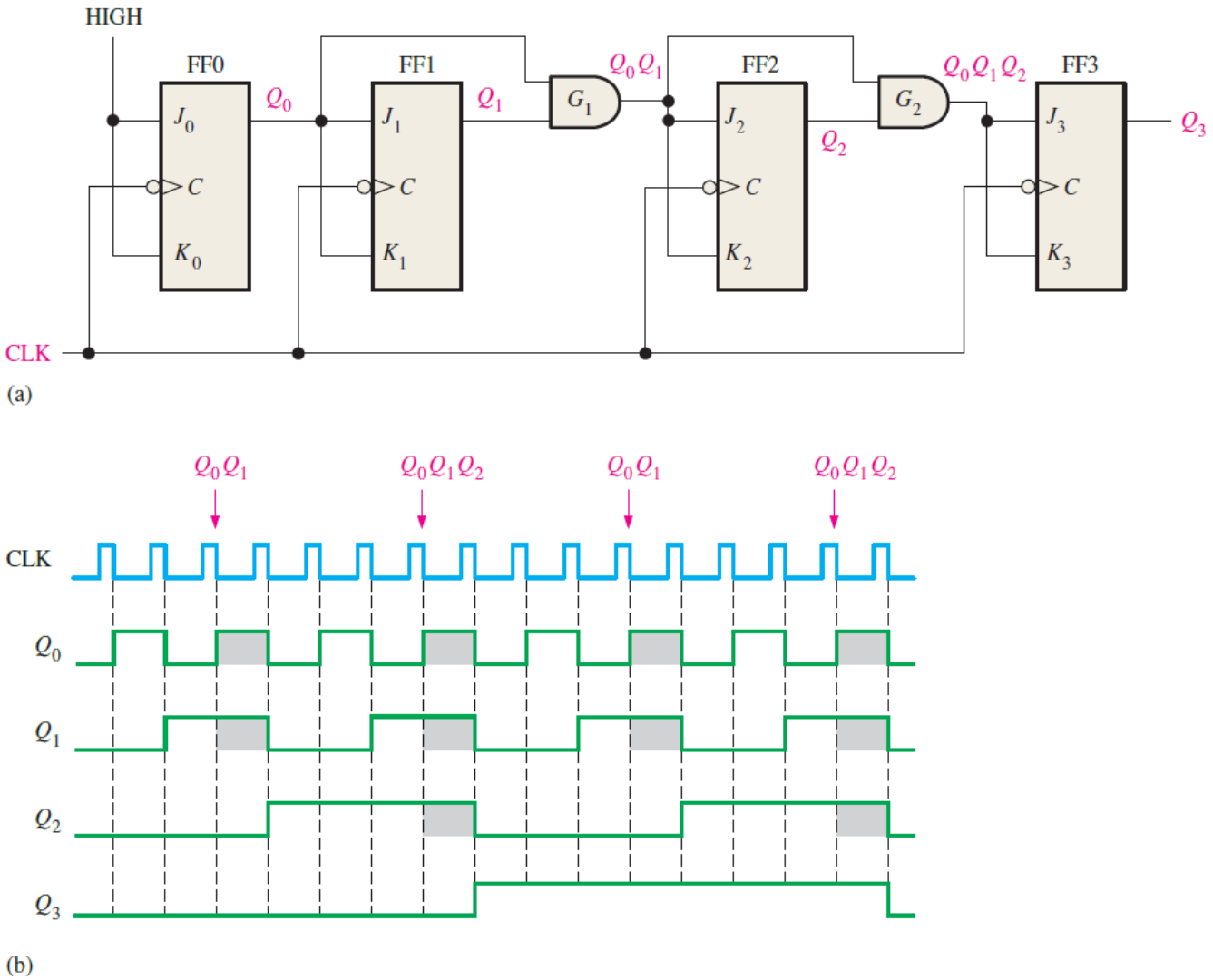

FIGURE 9–17 A 4-bit synchronous binary counter and timing diagram. Times where the AND gate outputs are HIGH are indicated by the shaded areas.

A 4-Bit Synchronous Decade Counter

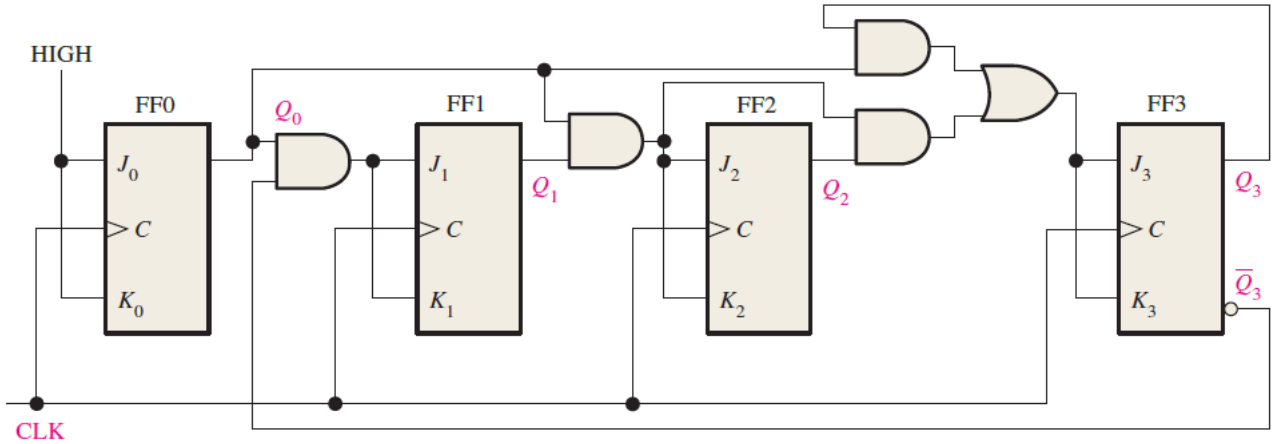

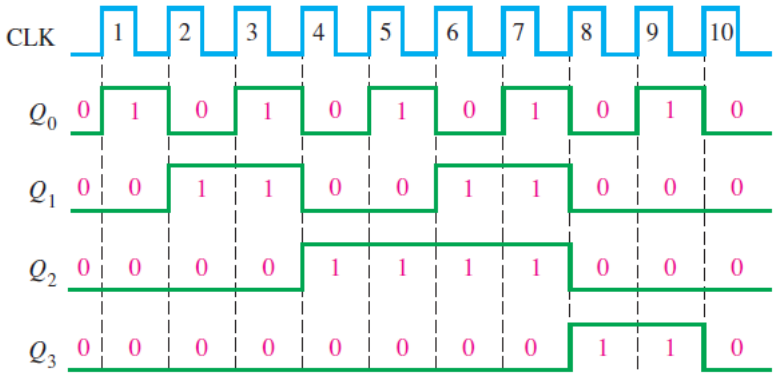

TABLE 9–5

States of a BCD decade counter.

Clock Pulse	Q_3	Q_2	Q_1	Q_0
Initially	0	0	0	0
1	0	0	0	1
2	0	0	1	0
3	0	0	1	1
4	0	1	0	0
5	0	1	0	1
6	0	1	1	0
7	0	1	1	1
8	1	0	0	0
9	1	0	0	1
10 (recycles)	0	0	0	0

4. Up/Down Synchronous Counters

Up/Down Synchronous Counters

- An *up/down counter* is one that is capable of progressing in either direction through a certain sequence.
- An up/down counter, sometimes called a *bidirectional counter*, can have any specified sequence of states.

$$\overbrace{0, 1, 2, 3, 4, 5}^{\text{UP}}, \underbrace{4, 3, 2}_{\text{DOWN}}, \overbrace{3, 4, 5, 6, 7}^{\text{UP}}, \underbrace{6, 5}_{\text{DOWN}}, \text{etc.}$$

Up/Down Synchronous Counters

TABLE 9–6

Up/Down sequence for a 3-bit binary counter.

Clock Pulse	Up	Q_2	Q_1	Q_0	Down
0		0	0	0	
1		0	0	1	
2		0	1	0	
3		0	1	1	
4		1	0	0	
5		1	0	1	
6		1	1	0	
7		1	1	1	

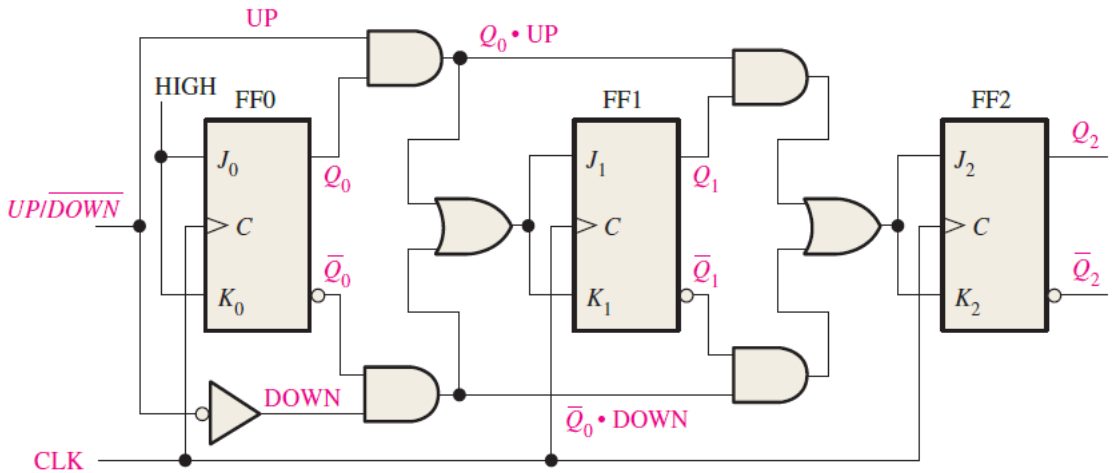

$$J_0 = K_0 = 1$$

$$J_1 = K_1 = (Q_0 \cdot \text{UP}) + (\overline{Q}_0 \cdot \text{DOWN})$$

$$J_2 = K_2 = (Q_0 \cdot Q_1 \cdot \text{UP}) + (\overline{Q}_0 \cdot \overline{Q}_1 \cdot \text{DOWN})$$

A 4-bit synchronous binary up/down counter

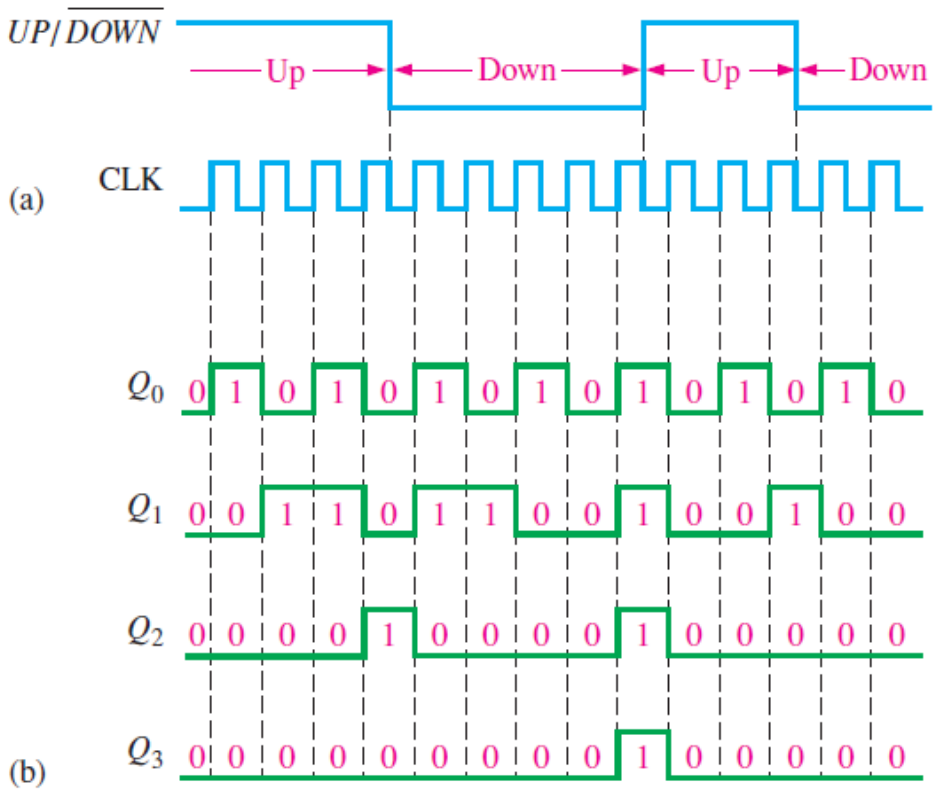

TABLE 9–7

Q_3	Q_2	Q_1	Q_0	
0	0	0	0	UP
0	0	0	1	
0	0	1	0	
0	0	1	1	
0	1	0	0	
0	0	1	1	DOWN
0	0	1	0	
0	0	0	1	
0	0	0	0	
1	1	1	1	
0	0	0	0	UP
0	0	0	1	
0	0	1	0	
0	0	0	1	DOWN
0	0	0	0	

5. Design of Synchronous Counters

Design of Synchronous Counters

Step 1: State Diagram

Step 2: Next-State Table

Step 3: Flip-Flop Transition Table

Step 4: Karnaugh Maps

Step 5: Logic Expressions for Flip-Flop Inputs

Step 6: Counter Implementation

Step 1: State Diagram

- A *state diagram* shows the progression of states through which the counter advances when it is clocked.
- A state diagram for a basic 3-bit Gray code counter.
  - no inputs other than the clock
  - no outputs other than the outputs taken off each flip-flop in the counter.

TABLE 2–6

Four-bit Gray code.

Decimal	Binary	Gray Code	Decimal	Binary	Gray Code
0	0000	0000	8	1000	1100
1	0001	0001	9	1001	1101
2	0010	0011	10	1010	1111
3	0011	0010	11	1011	1110
4	0100	0110	12	1100	1010
5	0101	0111	13	1101	1011
6	0110	0101	14	1110	1001
7	0111	0100	15	1111	1000

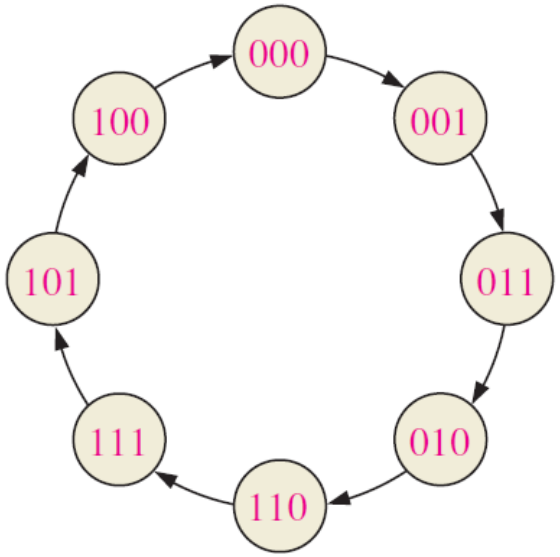

Step 2: Next-State Table

- The *next state* is the state that the counter goes to from its present state upon application of a clock pulse.

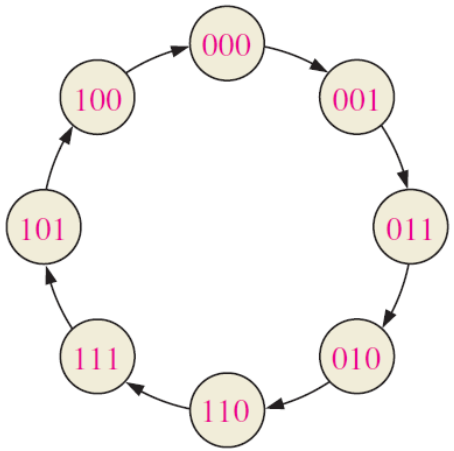

TABLE 9–8

Next-state table for 3-bit Gray code counter.

Present State			Next State		
Q_2	Q_1	Q_0	Q_2	Q_1	Q_0
0	0	0	0	0	1
0	0	1	0	1	1
0	1	1	0	1	0
0	1	0	1	1	0
1	1	0	1	1	1
1	1	1	1	0	1
1	0	1	1	0	0
1	0	0	0	0	0

Step 3: Flip-Flop Transition Table

TABLE 7–3

Truth table for a positive edge-triggered J-K flip-flop.

Inputs			Outputs		
J	K	CLK	Q	$\overline{Q}$	Comments
0	0	↑	Q_0	$\overline{Q}_0$	No change
0	1	↑	0	1	RESET
1	0	↑	1	0	SET
1	1	↑	$\overline{Q}_0$	Q_0	Toggle

↑ = clock transition LOW to HIGH

Q_0 = output level prior to clock transition

TABLE 9–9

Transition table for a J-K flip-flop.

Output Transitions			Flip-Flop Inputs	
Q_N		Q_{N+1}	J	K
0	⟶	0	0	X
0	⟶	1	1	X
1	⟶	0	X	1
1	⟶	1	X	0

Q_N: present state

Q_{N+1}: next state

X: "don't care"

Step 4: Karnaugh Maps

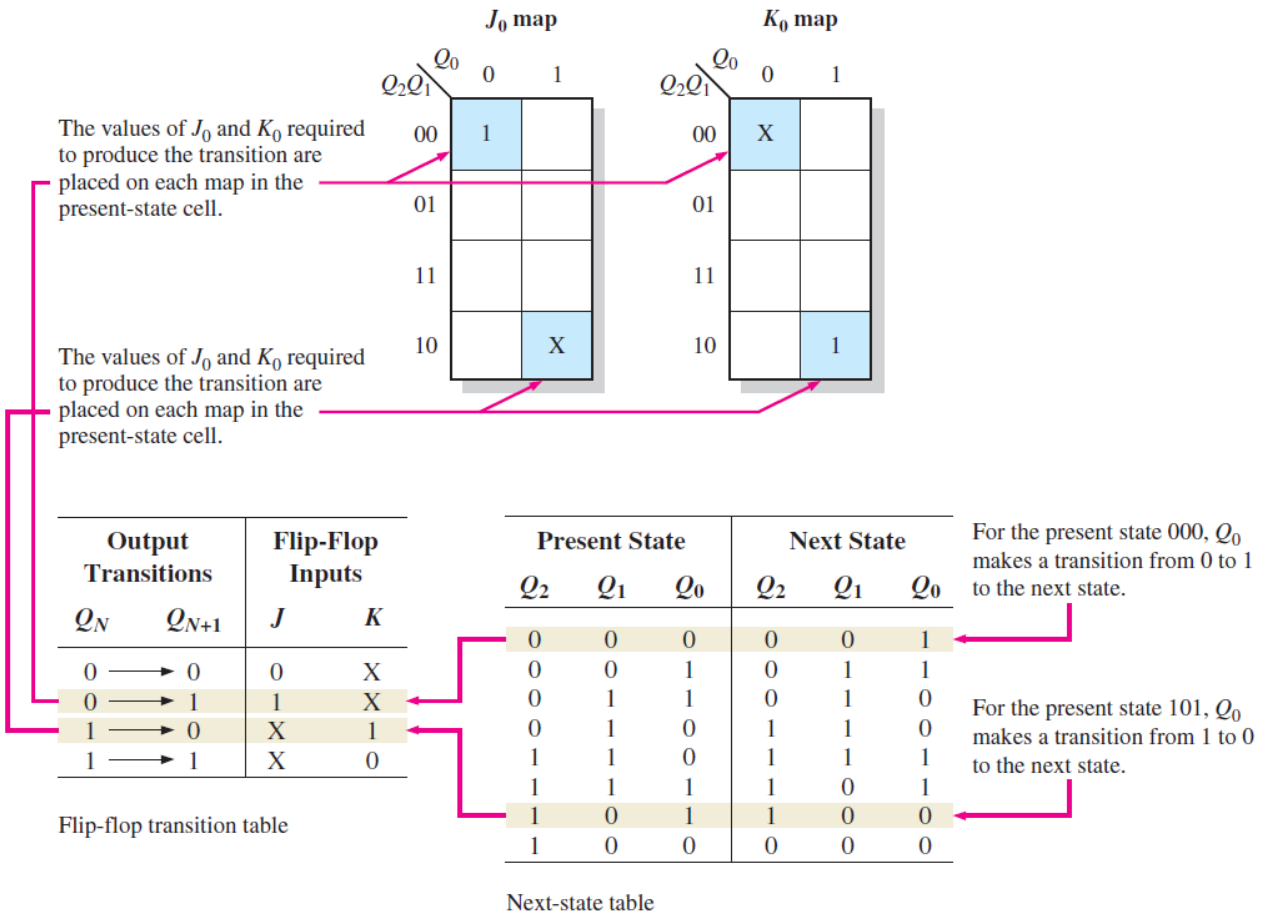

Output Transitions		Flip-Flop Inputs	
Q_N	Q_{N+1}	J	K
0 →	0	0	X
0 →	1	1	X
1 →	0	X	1
1 →	1	X	0

Present State			Next State		
Q_2	Q_1	Q_0	Q_2	Q_1	Q_0
0	0	0	0	0	1
0	0	1	0	1	1
0	1	1	0	1	0
0	1	0	1	1	0
1	1	0	1	1	1
1	1	1	1	0	1
1	0	1	1	0	0
1	0	0	0	0	0

FIGURE 9–27 Examples of the mapping procedure for the counter sequence represented in Table 9–8 and Table 9–9.

Step 4: Karnaugh Maps

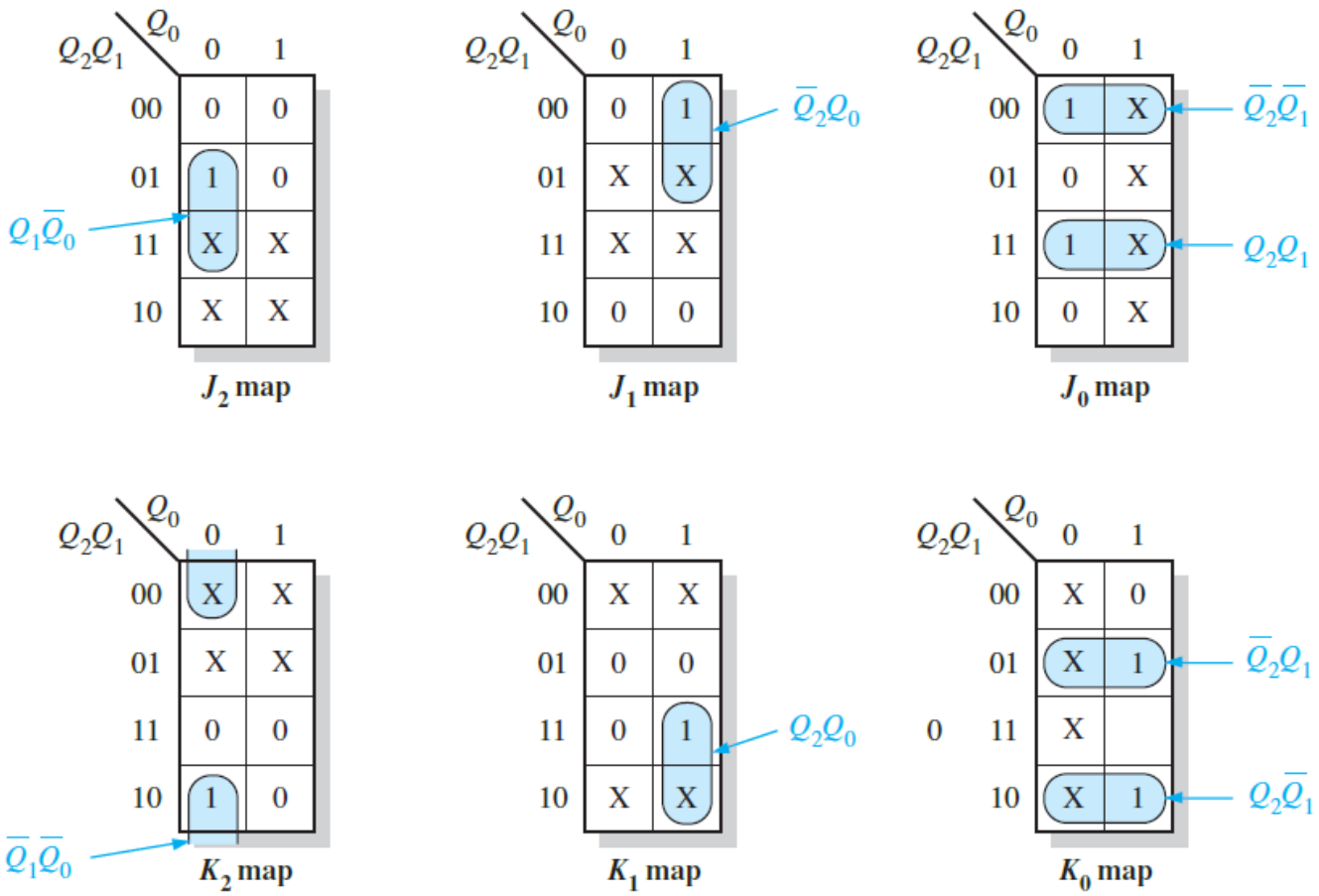

FIGURE 9–28 Karnaugh maps for present-state J and K inputs.

Step 5: Logic Expressions for Flip-Flop Inputs

$$J_0 = Q_2Q_1 + \overline{Q}_2\overline{Q}_1 = \overline{Q_2 \oplus Q_1}$$

$$K_0 = Q_2\overline{Q}_1 + \overline{Q}_2Q_1 = Q_2 \oplus Q_1$$

$$J_1 = \overline{Q}_2Q_0$$

$$K_1 = Q_2Q_0$$

$$J_2 = Q_1\overline{Q}_0$$

$$K_2 = \overline{Q}_1\overline{Q}_0$$

Step 6: Counter Implementation

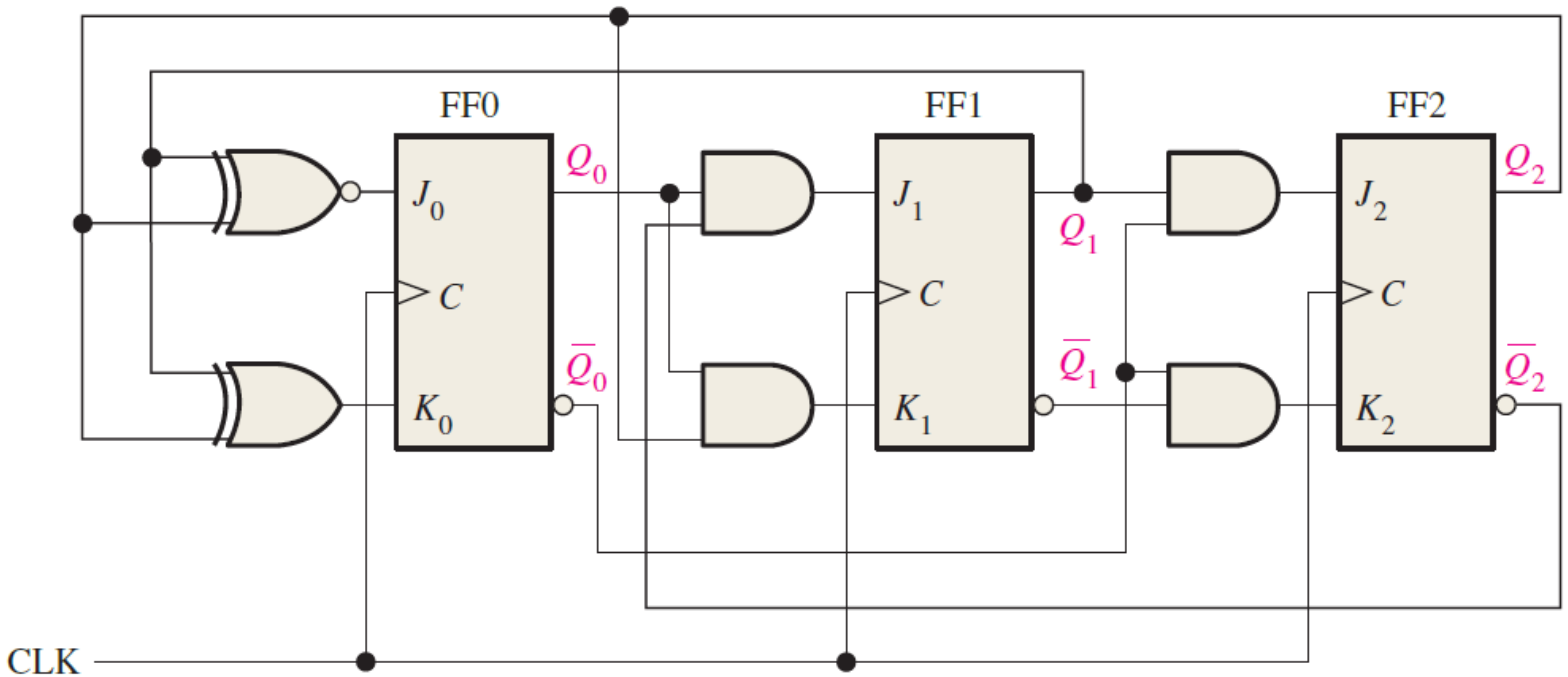

Example Using D-FF

Design a counter with the irregular binary count sequence shown in the state diagram of Figure 9–30. Use D flip-flops.

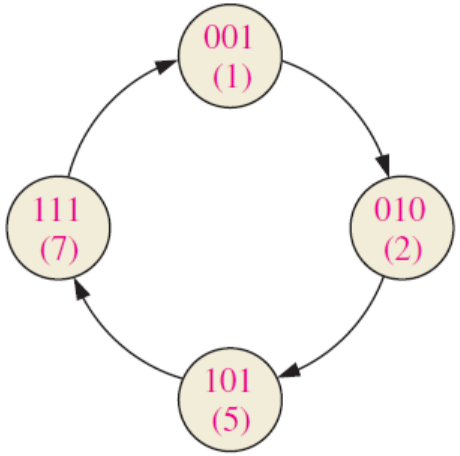

Step 2: Next-State Table

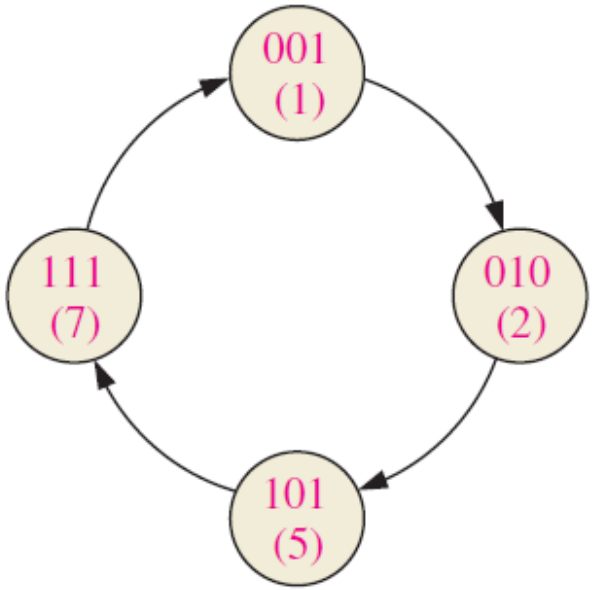

TABLE 9–10

Next-state table.

Present State			Next State		
Q_2	Q_1	Q_0	Q_2	Q_1	Q_0
0	0	1	0	1	0
0	1	0	1	0	1
1	0	1	1	1	1
1	1	1	0	0	1

Step 3: Flip-Flop Transition Table

TABLE 7–2

Truth table for a positive edge-triggered D flip-flop.

Inputs		Outputs		
D	CLK	Q	$\overline{Q}$	Comments
0	↑	0	1	RESET
1	↑	1	0	SET

↑ = clock transition LOW to HIGH

TABLE 9–11

Transition table for a D flip-flop.

Output Transitions			Flip-Flop Input
Q_N		Q_{N+1}	D
0	→	0	0
0	→	1	1
1	→	0	0
1	→	1	1

Step 4: Karnaugh Maps

TABLE 9–10

Next-state table.

Present State			Next State		
Q_2	Q_1	Q_0	Q_2	Q_1	Q_0
0	0	1	0	1	0
0	1	0	1	0	1
1	0	1	1	1	1
1	1	1	0	0	1

TABLE 9–11

Transition table for a D flip-flop.

Output Transitions			Flip-Flop Input
Q_N		Q_{N+1}	D
0	$\longrightarrow$	0	0
0	$\longrightarrow$	1	1
1	$\longrightarrow$	0	0
1	$\longrightarrow$	1	1

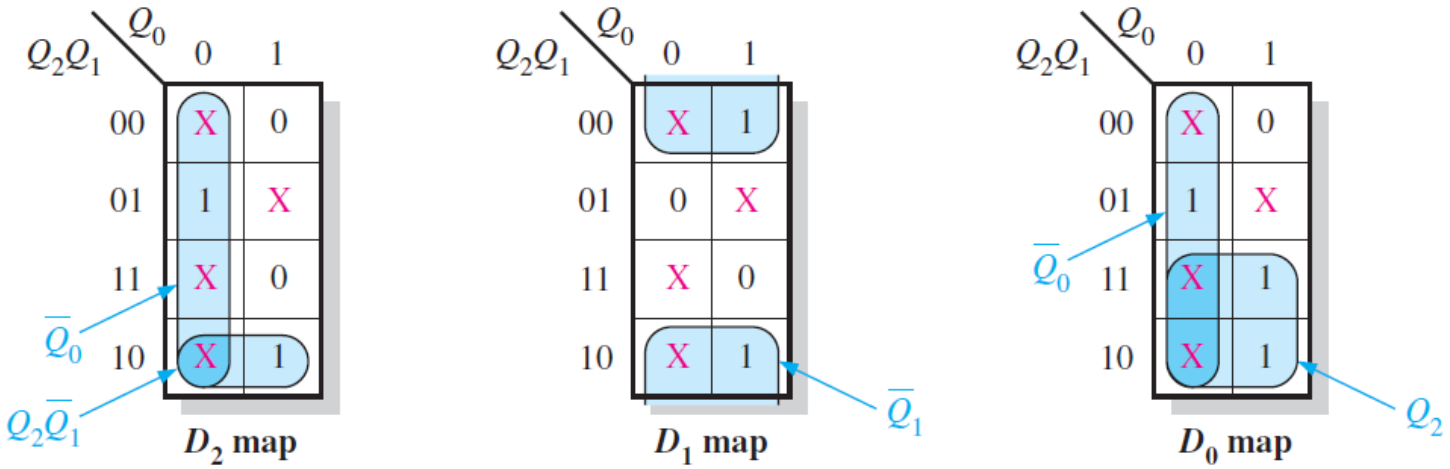

Step 5: Logic Expressions for Flip-Flop Inputs

$$D_0 = \overline{Q}_0 + Q_2$$

$$D_1 = \overline{Q}_1$$

$$D_2 = \overline{Q}_0 + Q_2\overline{Q}_1$$

Step 6: Counter Implementation

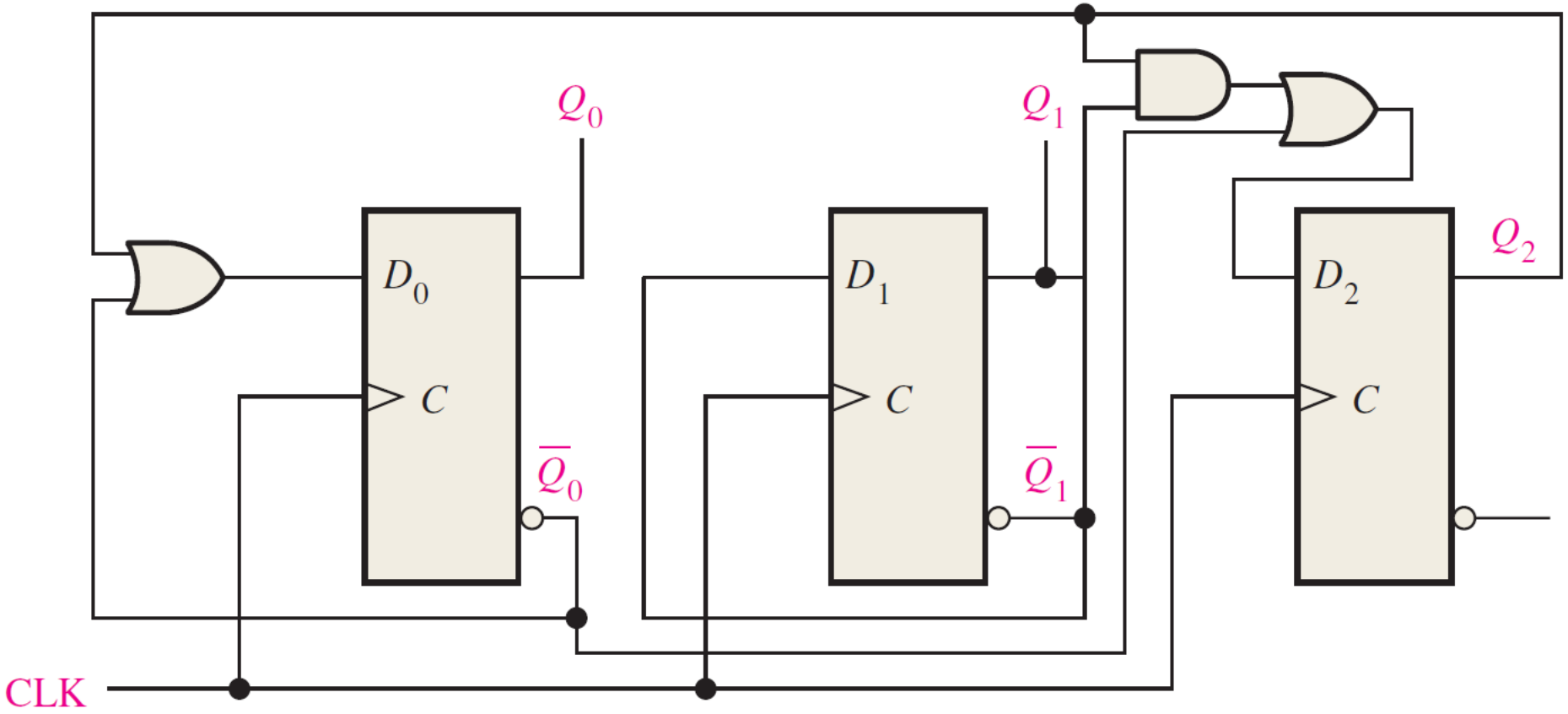

Example of Mealy Model

- Develop a synchronous 3-bit up/down counter with a Gray code sequence using J-K flip-flops.
- The counter should count up when an UP/DOWN control input is 1 and count down when the control input is 0.

Step 1: State Diagram

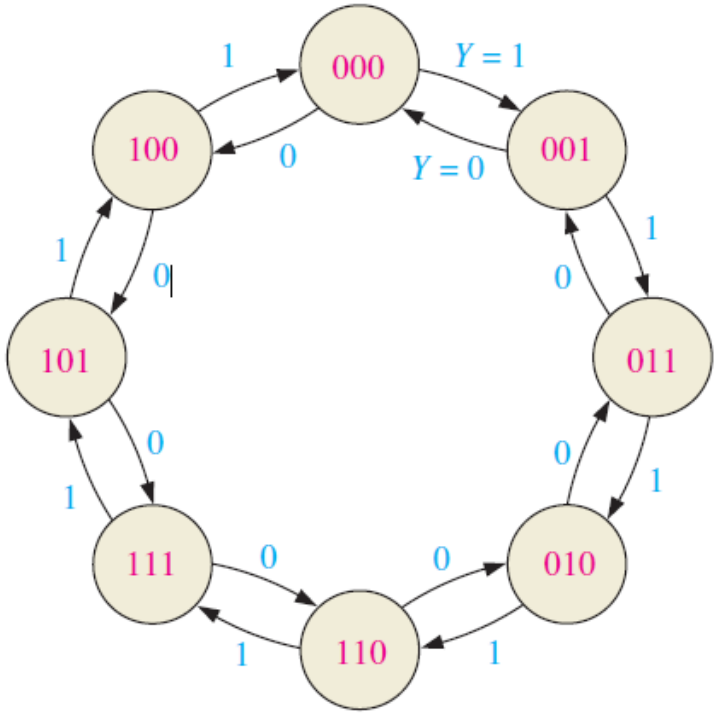

Step 2: Next-State Table

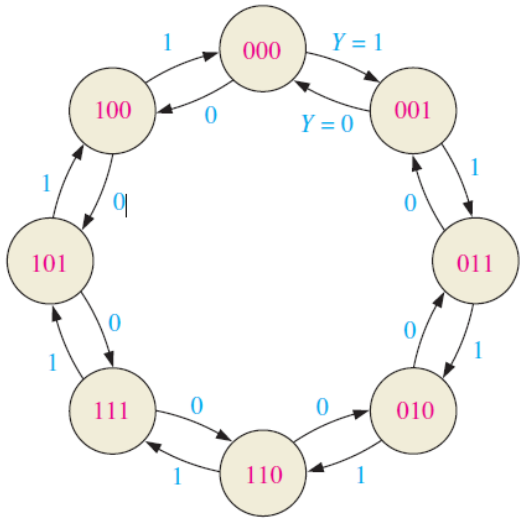

TABLE 9–12

Next-state table for 3-bit up/down Gray code counter.

Present State			Next State					
			$Y = 0$ (DOWN)			$Y = 1$ (UP)		
Q_2	Q_1	Q_0	Q_2	Q_1	Q_0	Q_2	Q_1	Q_0
0	0	0	1	0	0	0	0	1
0	0	1	0	0	0	0	1	1
0	1	1	0	0	1	0	1	0
0	1	0	0	1	1	1	1	0
1	1	0	0	1	0	1	1	1
1	1	1	1	1	0	1	0	1
1	0	1	1	1	1	1	0	0
1	0	0	1	0	1	0	0	0

$Y =$ UP/$\overline{\text{DOWN}}$ control input.

Step 3: Flip-Flop Transition Table

TABLE 9–13

Transition table for a J-K flip-flop.

Output Transitions			Flip-Flop Inputs	
Q_N		Q_{N+1}	J	K
0	$\longrightarrow$	0	0	X
0	$\longrightarrow$	1	1	X
1	$\longrightarrow$	0	X	1
1	$\longrightarrow$	1	X	0

Step 4: Karnaugh Maps

TABLE 9–12

Next-state table for 3-bit up/down Gray code counter.

Present State			Next State					
			$Y = 0$ (DOWN)			$Y = 1$ (UP)		
Q_2	Q_1	Q_0	Q_2	Q_1	Q_0	Q_2	Q_1	Q_0
0	0	0	1	0	0	0	0	
0	0	1	0	0	0	0	1	
0	1	1	0	0	1	0	1	
0	1	0	0	1	1	1	1	
1	1	0	0	1	0	1	1	
1	1	1	1	1	0	1	0	
1	0	1	1	1	1	1	0	
1	0	0	1	0	1	0	0	

Y = UP/$\overline{\text{DOWN}}$ control input.

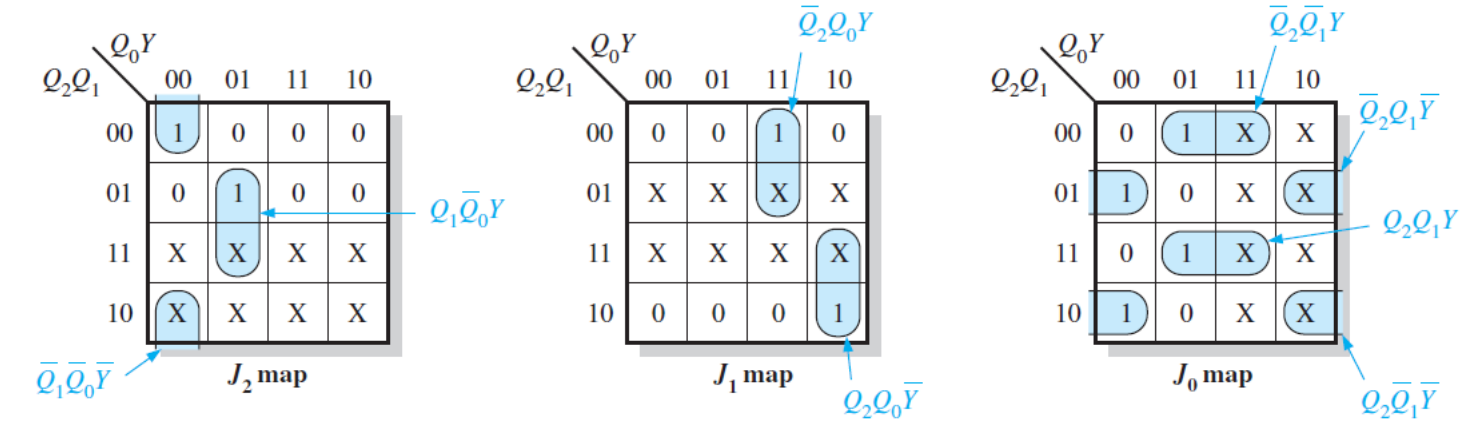

TABLE 9–13

Transition table for a J-K flip-flop.

Output Transitions			Flip-Flop Inputs	
Q_N		Q_{N+1}	J	K
0	→	0	0	X
0	→	1	1	X
1	→	0	X	1
1	→	1	X	0

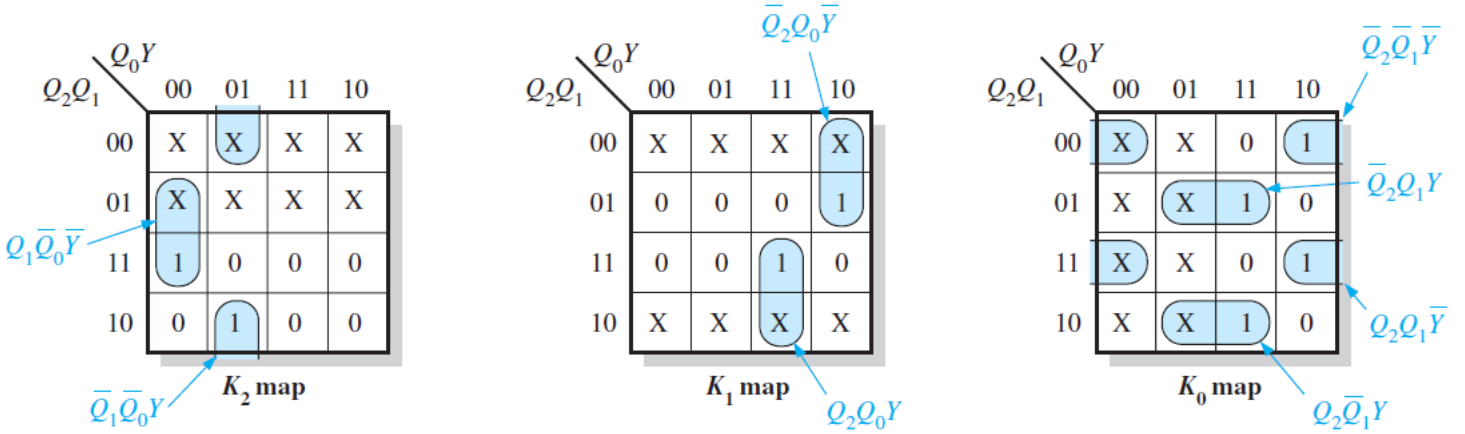

Step 5: Logic Expressions for Flip-Flop Inputs

$$J_0 = Q_2Q_1Y + Q_2\overline{Q}_1\overline{Y} + \overline{Q}_2\overline{Q}_1Y + \overline{Q}_2Q_1\overline{Y}$$

$$J_1 = \overline{Q}_2Q_0Y + Q_2Q_0\overline{Y}$$

$$J_2 = Q_1\overline{Q}_0Y + \overline{Q}_1\overline{Q}_0\overline{Y}$$

$$K_0 = \overline{Q}_2\overline{Q}_1\overline{Y} + \overline{Q}_2Q_1Y + Q_2\overline{Q}_1Y + Q_2Q_1\overline{Y}$$

$$K_1 = \overline{Q}_2Q_0\overline{Y} + Q_2Q_0Y$$

$$K_2 = Q_1\overline{Q}_0\overline{Y} + \overline{Q}_1\overline{Q}_0Y$$

6. Counter Decoding

Counter Decoding

- Interest (detect) in some sequence (state) of a counter.

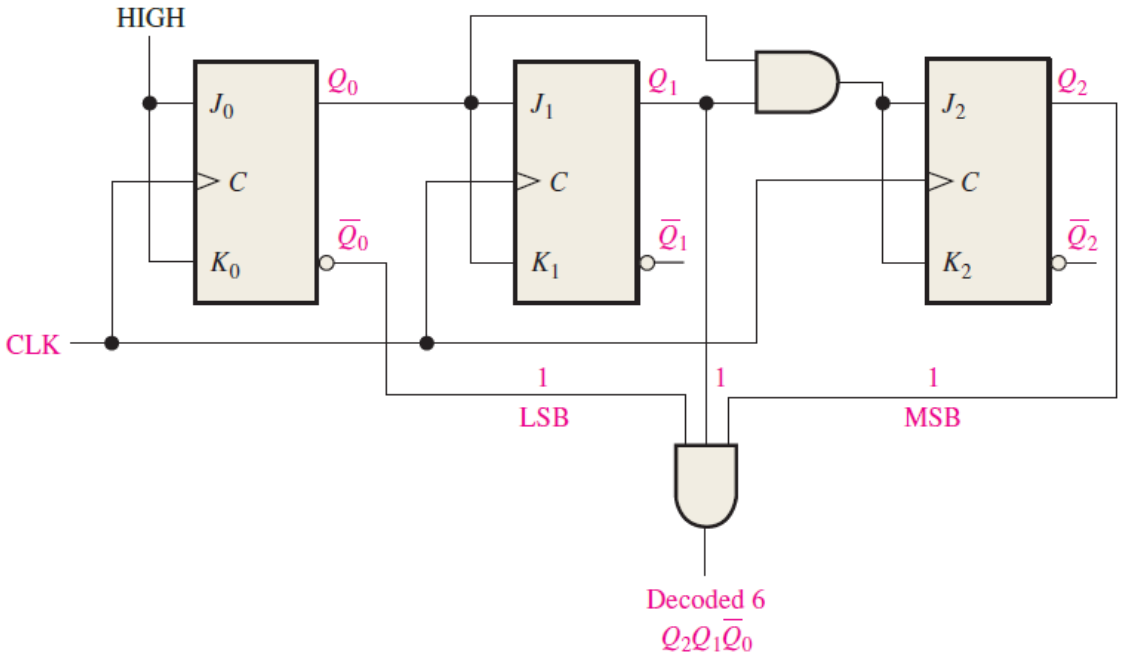

FIGURE 9–42 Decoding of state 6 (110). Open file F09-42 to verify operation.

Decode count 2 and count 7

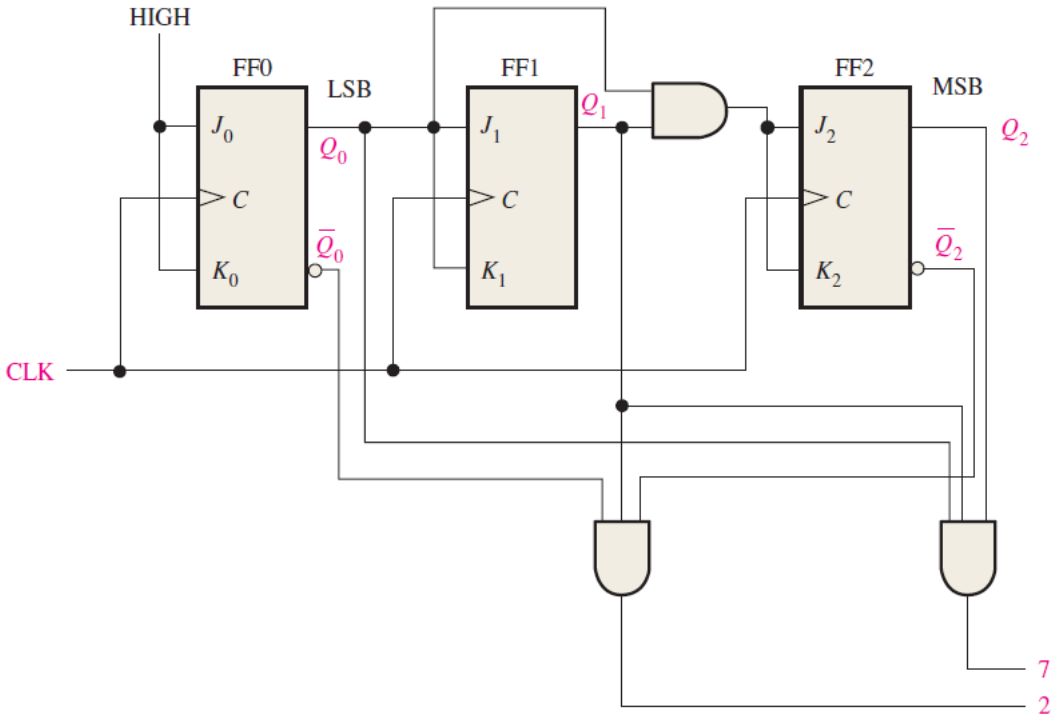

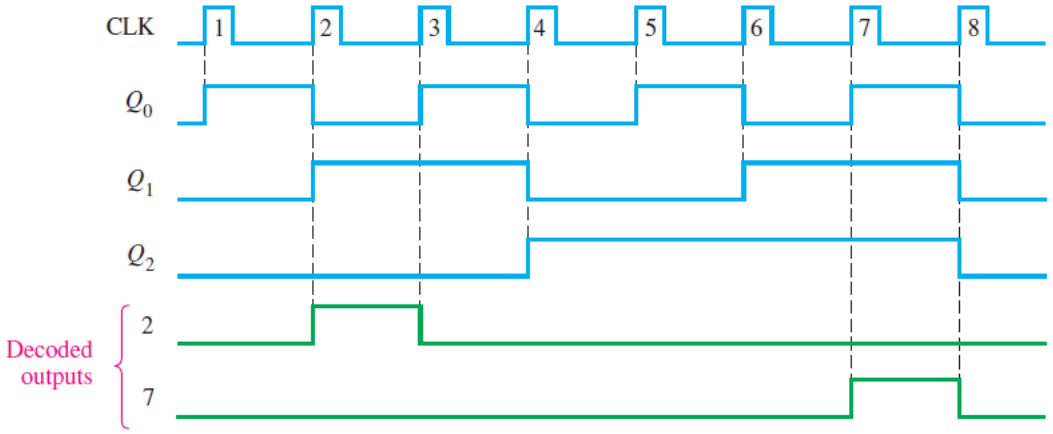

Counter Decoding Using A Decoder

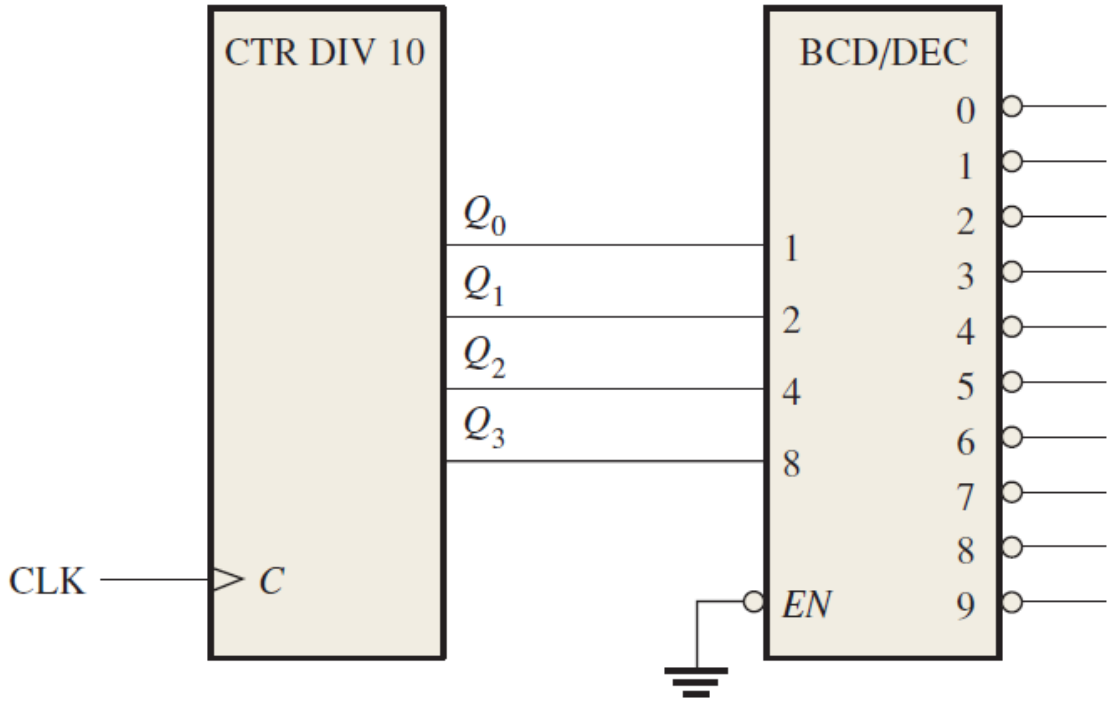

A basic decade (BCD) counter and decoder.

7. Counter Applications

A Digital Clock

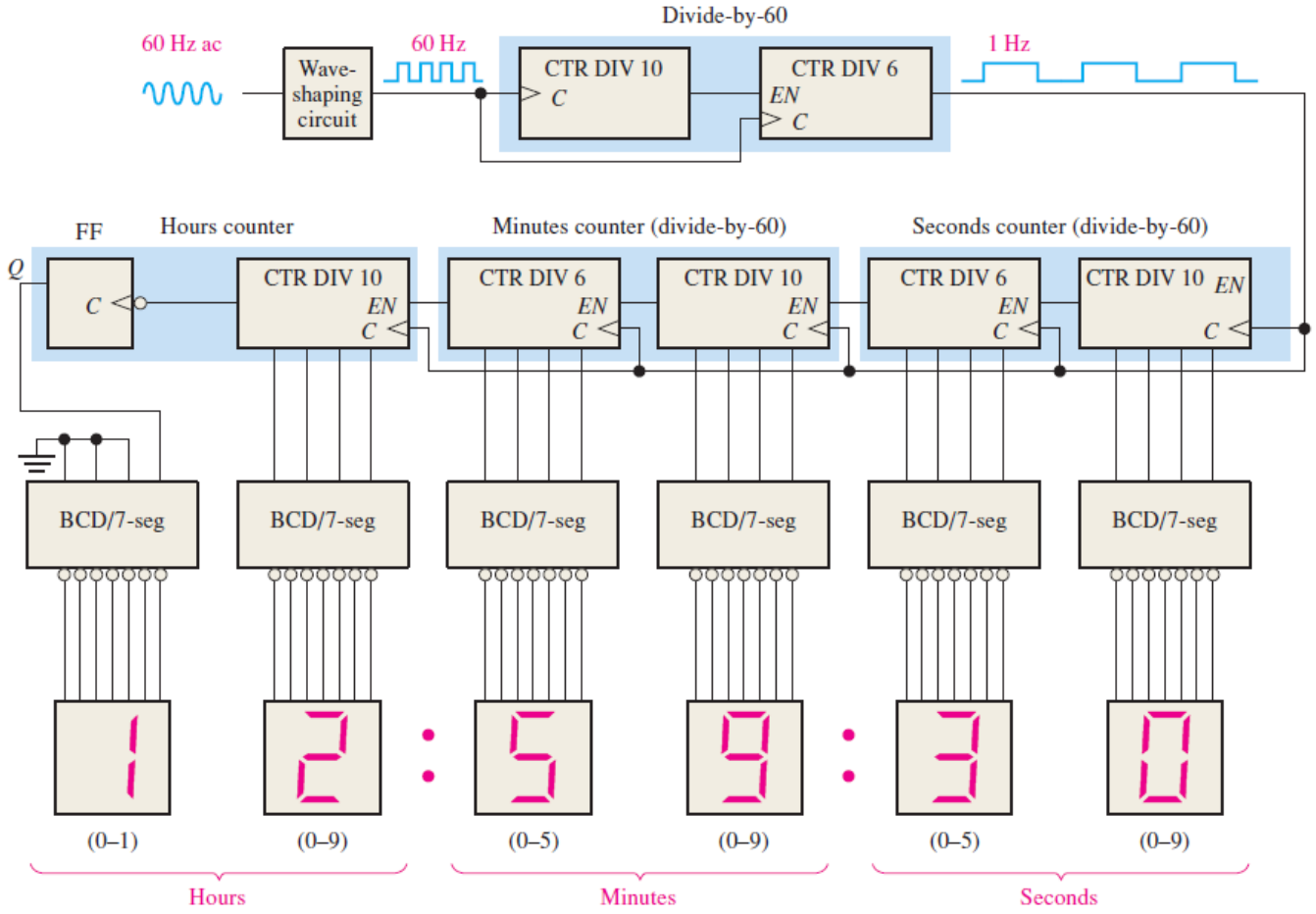

FIGURE 9–48 Simplified logic diagram for a 12-hour digital clock. Logic details using specific devices are shown in Figures 9–49 and 9–50.

Parking Control

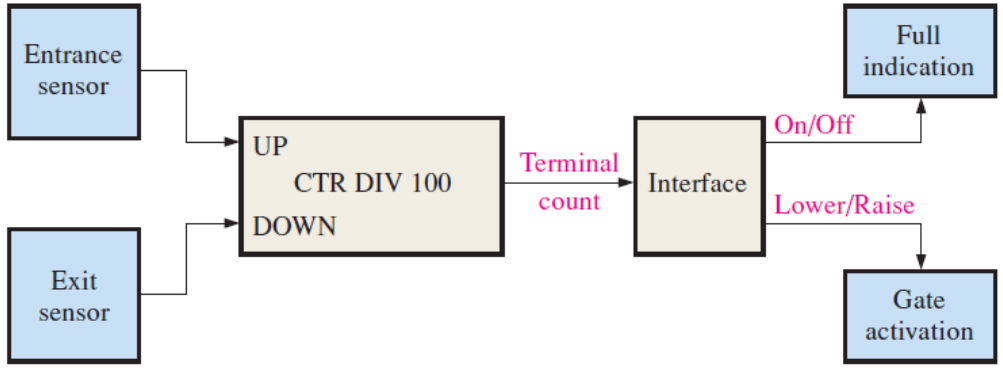

FIGURE 9–51 Functional block diagram for parking garage control.

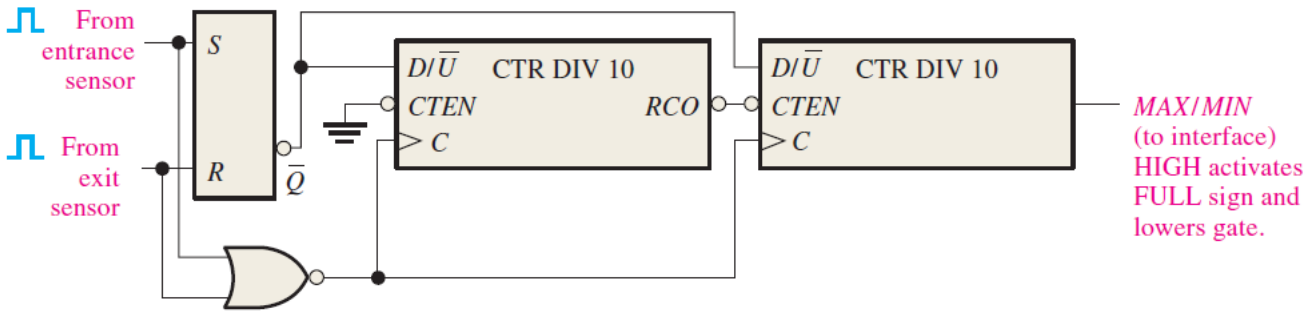

FIGURE 9–52 Logic diagram for modulus-100 up/down counter for automobile parking control.

THANK YOU